Design and Kinematic Analysis of a Cam-Follower Mechanism

Mechanism Engineering Report

March 14, 2026

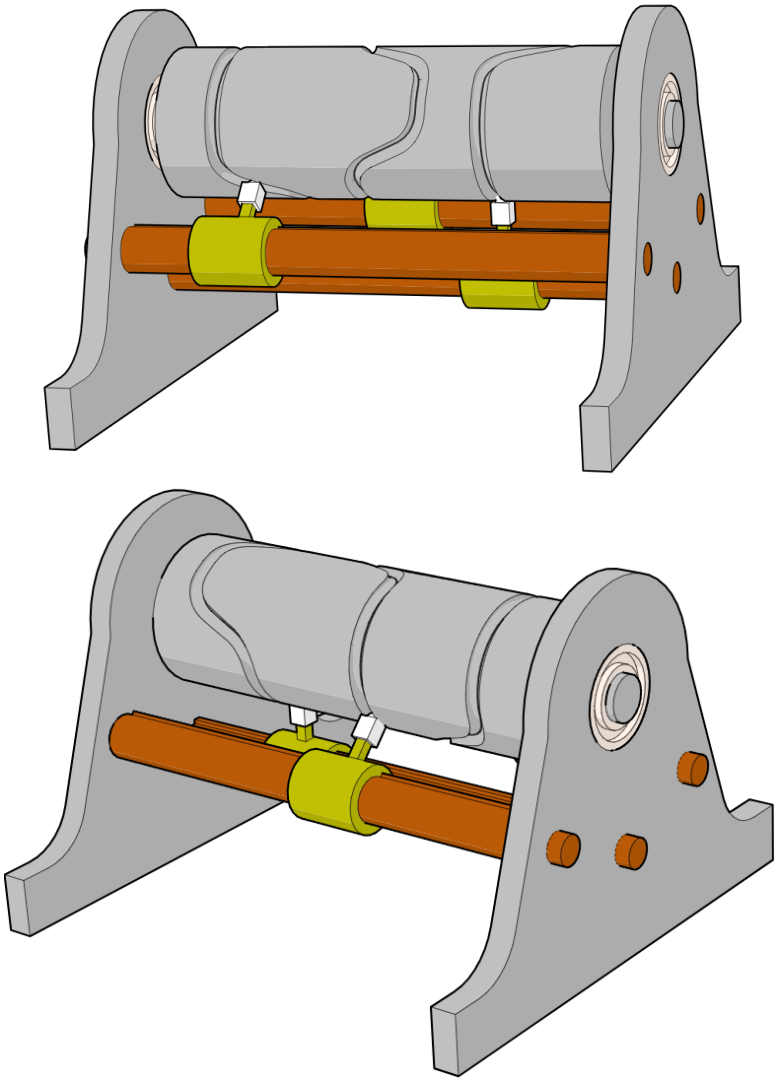

Abstract

This document details the design and kinematic simulation of a mechanical cam and follower assembly. The analysis includes a breakdown of the sub-components, an overview of the working principles, and an evaluation of the mechanism's kinematic profile, illustrating the precise and independent actuation of the system's needles.

1 Working Mechanism Illustration

The mechanism relies on a rotating barrel cam to translate continuous rotational motion into precise, linear reciprocating motion at the followers. As the cam barrel rotates, the sweeping cam grooves actively guide the follower pins back and forth along the guiding rods, providing positive control in both directions without the need for a return spring.

The physical layout of the components is detailed below from both the front and rear perspectives for clear part labeling.

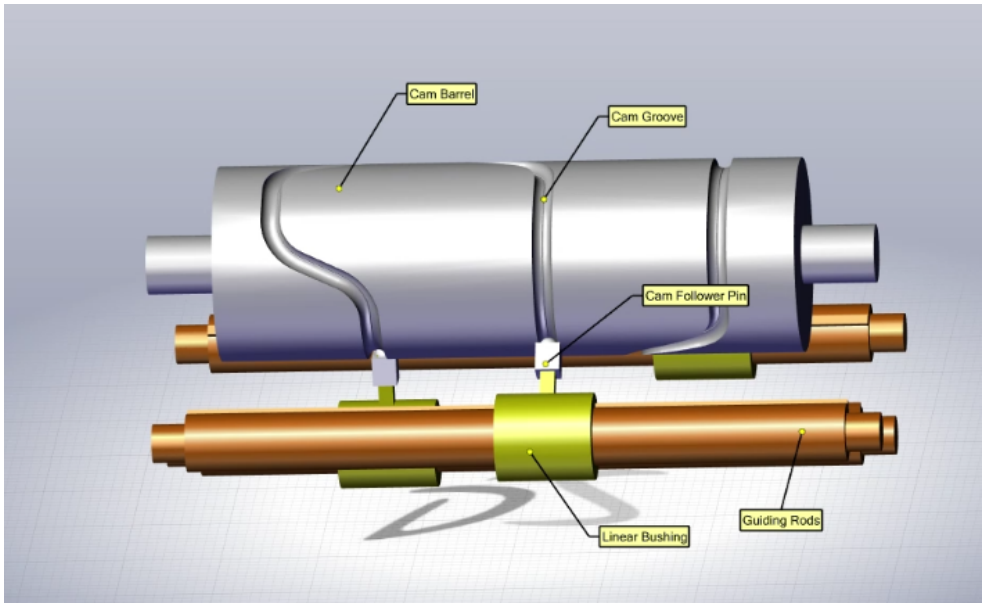

Figure 1: Front view of the mechanism.

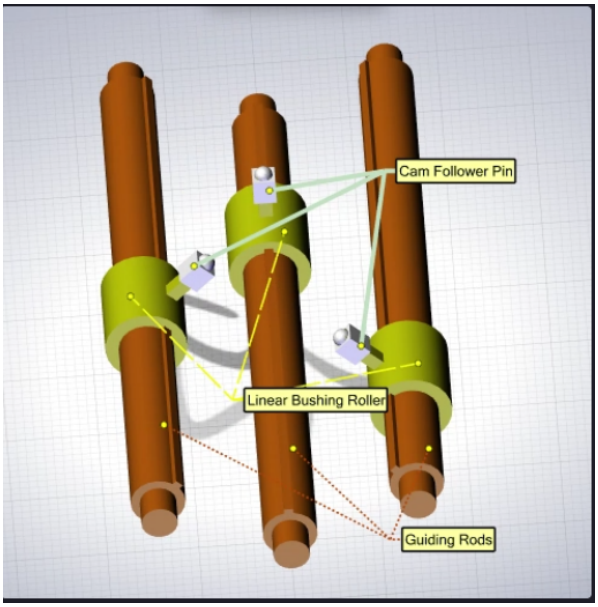

Figure 2: Rear view of the mechanism.

The grooved barrel design maintains constant contact with the follower pins, ensuring that the mechanism tracks the designated profile accurately. Because this mechanism is designed for deliberate, low-speed manual actuation rather than continuous high-speed motor driving, a thumbwheel is utilized to rotate the cam barrel. This allows for precise, user-controlled adjustments of the linear mechanisms.

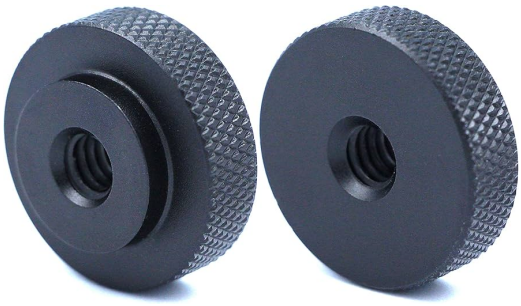

Figure 3: Detail view of the thumbwheel used for manual actuation of the cam barrel.

2 Parts List and Bill of Materials

The mechanism consists of a simplified kinematic chain with rigid bodies and force elements. The primary components are detailed in Table 1.

Table 1: Primary Components of the Cam Assembly

Item No.	Part Description	Quantity
1	Frame / Base	1
2	Cam Barrel (with Cam Grooves)	1
3	Guiding Rods	3
4	Linear Bushing & Cam Follower Pin*	3
5	Bearings	2
6	Thumbwheel (Manual Actuator)	1

**Note: The Linear Bushing (Roller) and the Cam Follower Pin will be manufactured as a single integrated component in reality. They were solely separated into two distinct parts within the software environment for the purposes of kinematic modeling and dynamic simulation.*

3 Operational Phases

The actuation cycle of the mechanism is broken down into distinct phases, illustrating the progression of the follower throughout a complete 360-degree rotation of the cam.

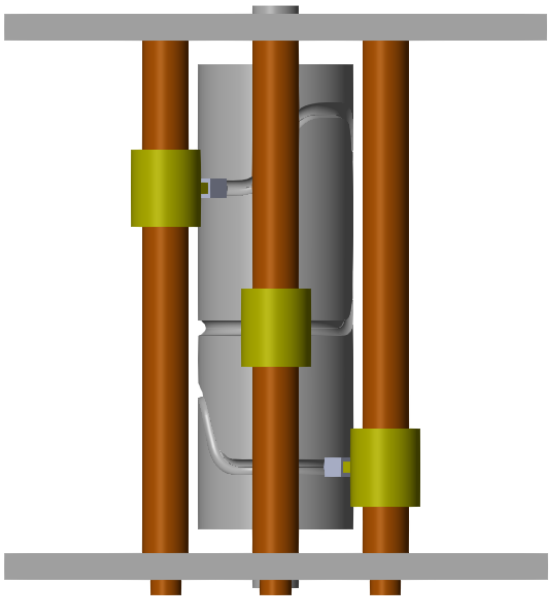

Figure 4: Phase 1: All down.

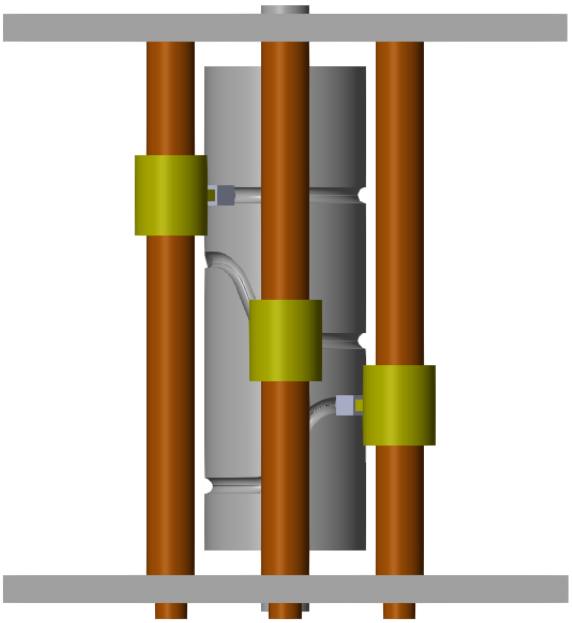

Figure 5: Phase 2: Right up.

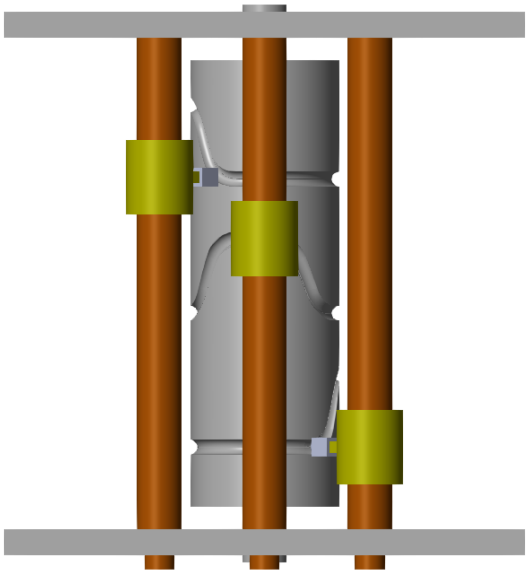

Figure 6: Phase 3: Middle up/Right down.

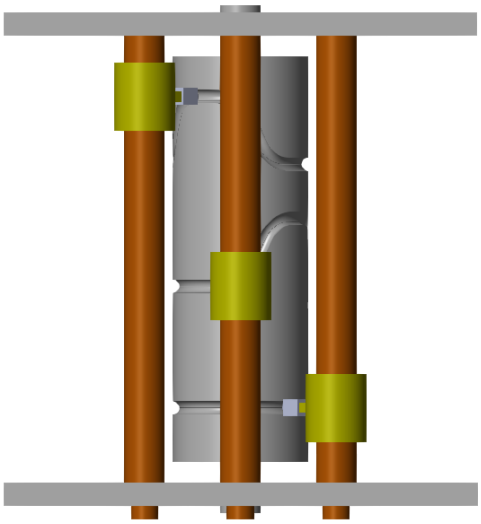

Figure 7: Phase 4: Left up/ Middle down.

4 Kinematic Profile

A kinematic simulation was conducted to evaluate the linear motion of the mechanism over time. Rather than focusing on dynamic torque, this analysis validates the precise timing and displacement generated by the cam profile.

The resulting kinematic profile captures the linear position of the assembly during operation. Specifically, the simulation output demonstrates how each needle moves entirely alone with respect to the other two, ensuring that their individual actuation phases do not overlap incorrectly.

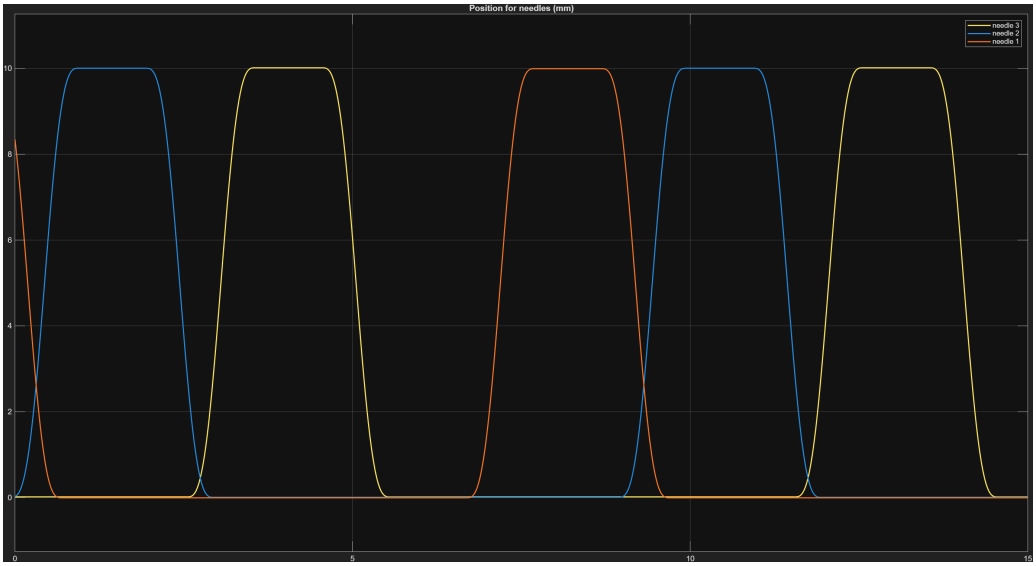

Figure 8: Kinematic profile output showing the linear position over time, illustrating that each needle actuates independently with respect to the other two.

5 Conclusion and Recommendations

This barrel cam-follower mechanism provides a reliable and highly precise method for translating continuous rotary motion into specific, multi-axis linear sequences. The positive-return nature of the cam grooves guarantees accurate tracking and timing without relying on spring tension.

As demonstrated by the kinematic profile, the system effectively manages the timing of multiple actuations, ensuring that each needle moves independently of the others. To optimize this design for manufacturing, it is critical to ensure high-precision CNC machining of the cam grooves to minimize backlash and maintain this exact timing. Additionally, proper tolerancing and lubrication between the guiding rods and linear bushings will be essential to reduce sliding friction and extend the overall lifespan of the mechanism.

For future design iterations and optimization, another configuration could be utilized to reduce the overall length of the cam barrel. By designing the left and right cam followers to track along the same groove path, the total number of required grooves is decreased, allowing for a more compact barrel length. Furthermore, the system's capacity could be expanded to accommodate an increased number of needles by increasing the cam barrel diameter. However, this modification must be carefully considered, as a larger diameter may directly affect the overall size and form factor constraints of the laparoscopic device.

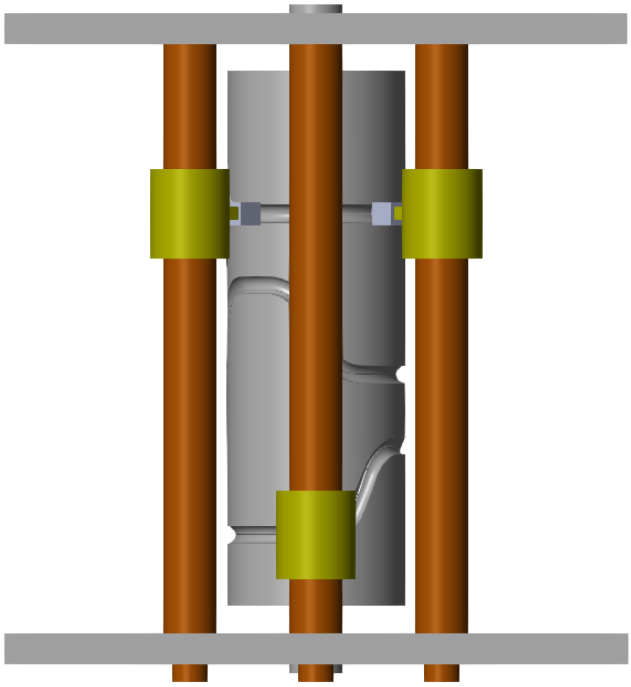

Figure 9: Proposed alternative configuration utilizing a shared cam groove to reduce overall barrel length.